INCLUDED PARTS

60 x 36	72 x 36 and 80 x 40
P1 2x	P1 2x
P2-L2 2x	P2-L2 2x
P3 2x	P3 2x
L1 4x	L1 6x
P5 38x	P5 46x
MICRO BLOCK 8x	MICRO BLOCK 12x
1" BUTTON HEAD 8x	1" BUTTON HEAD 12x
1" 38x	1" 46x
5/32" 1x	5/32" 1x

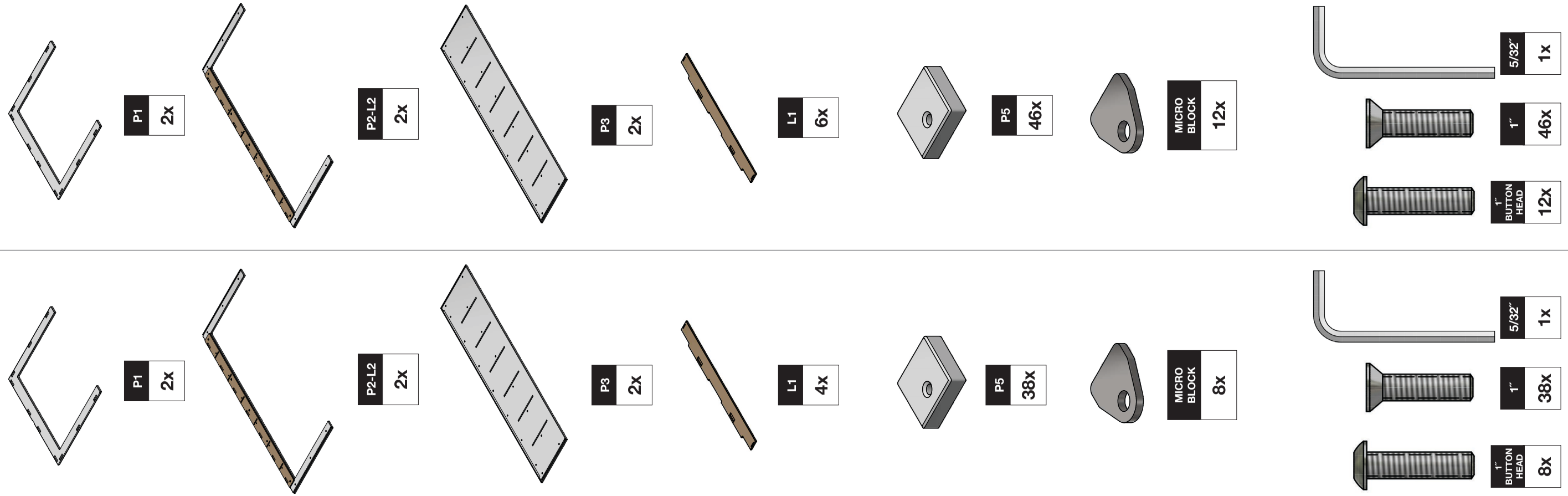

*Bolt shown actual size.

ASSEMBLY TIPS: 5 Important Points You **NEED** to Read

1. Prior to beginning assembly, please inspect and inventory the parts to make sure you have everything and that nothing was damaged during shipping. If damage has occurred, please take photos and go to lolldesigns.com/damage. Rest assured we'll get it taken care of straight away!
2. To avoid scratching furniture, assemble on a clean soft surface like a blanket, carpet, or the flattened cardboard box the furniture was shipped in.
3. **Start all bolts by hand to ensure proper alignment and to prevent cross threading.** Then using the Allen Key or Loll Tool, tighten until you feel resistance.
4. Bolts should not be forced, but some components, particularly the blocks will need a bit of muscle to get them together as they are machined for a snug fit. If parts are still not going together, please send us a photo of the part you are having trouble with.
5. You can use a cordless screw gun if you have one and know how to use it. Set the clutch setting at low to medium torque. **We do not recommend using an electric drill without a clutch** to install bolts as you can easily overtighten and damage the product.

BLOCK & BOLT INSTALLATION

Insert bolts through countersunk hole side of blocks as shown below.

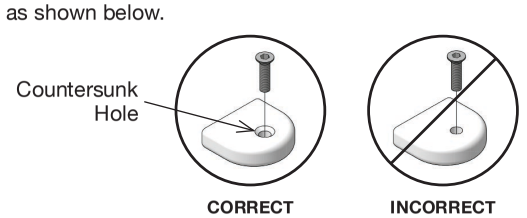

"Loll Designs inspires people to appreciate the outdoors."
Greg Benson - Founder

RECYCLE THE PACKAGING

We've gone through great lengths to make as much of our packaging as possible recyclable. The cardboard box, paper wrap, filler and paper bags can all go in your recycling bin. The muslin hardware bags replaced plastic bags with the intention of reducing plastic and encouraging reuse. Loll Designs and Planet Earth thank you!

WE WANT YOU TO LOVE YOUR LOLL

For more info and visual aids, watch the assembly videos at www.lolldesigns.com/videos
For product care & maintenance, visit www.lolldesigns.com/care-maintenance
For further **loll**ygagging assistance, please reach out!

+1 877-740-3387
sales@lolldesigns.com

5912 Waseca Street
Duluth, Minnesota 55807

MADE IN THE USA · CERTIFIED cradletocradle · be ORIGINAL Member · 1% FOR THE PLANET MEMBER #610 · it's good to be recycled

ASSEMBLY INSTRUCTIONS & PRODUCT INFO: HENRY RECTANGLE TABLE

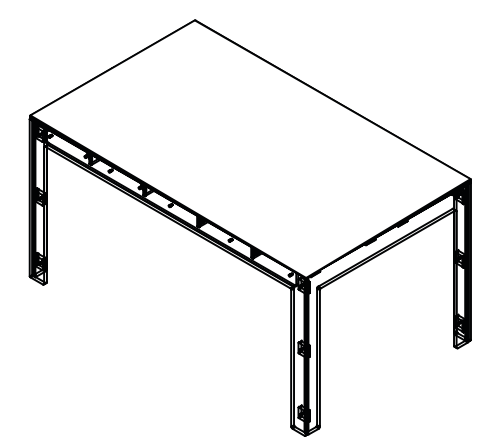

Room&Board

BY: loll DESIGNS

1

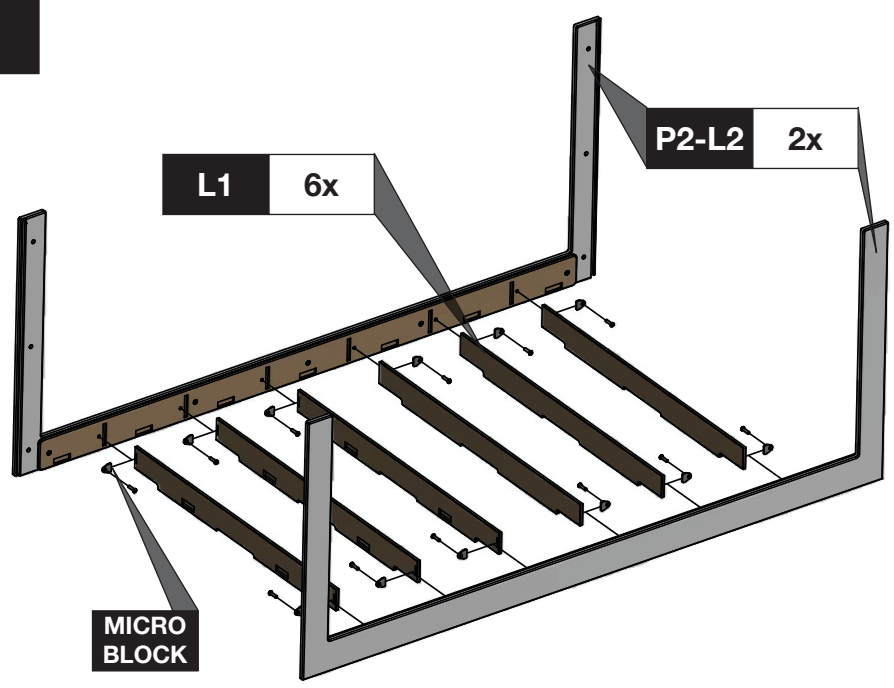

60 x 36	72 x 36 and 80 x 40
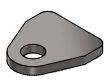	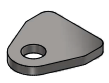
MICRO BLOCK 8x	MICRO BLOCK 12x
1″ BUTTON 8x	1″ BUTTON 12x

*80x40 table shown

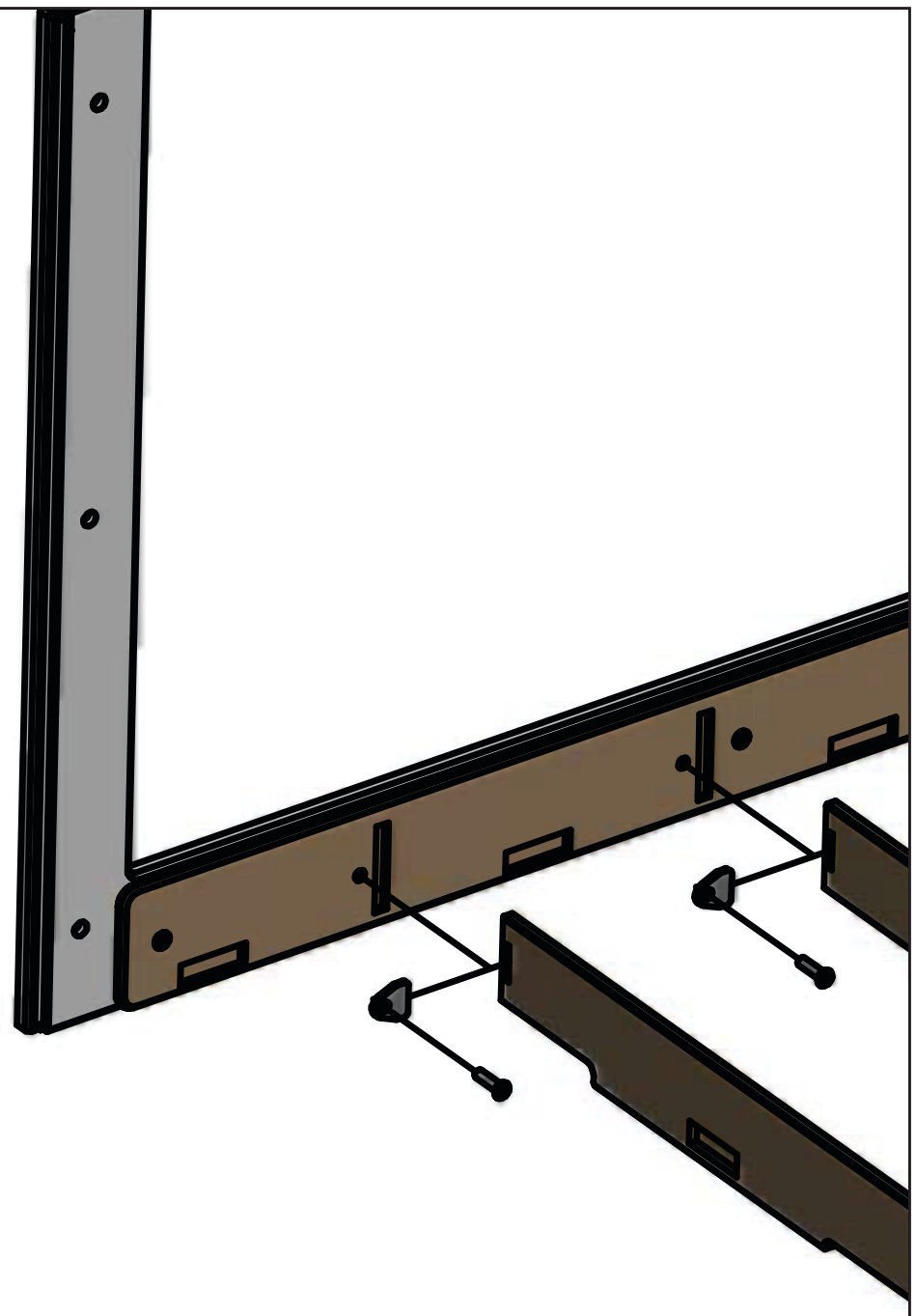

2

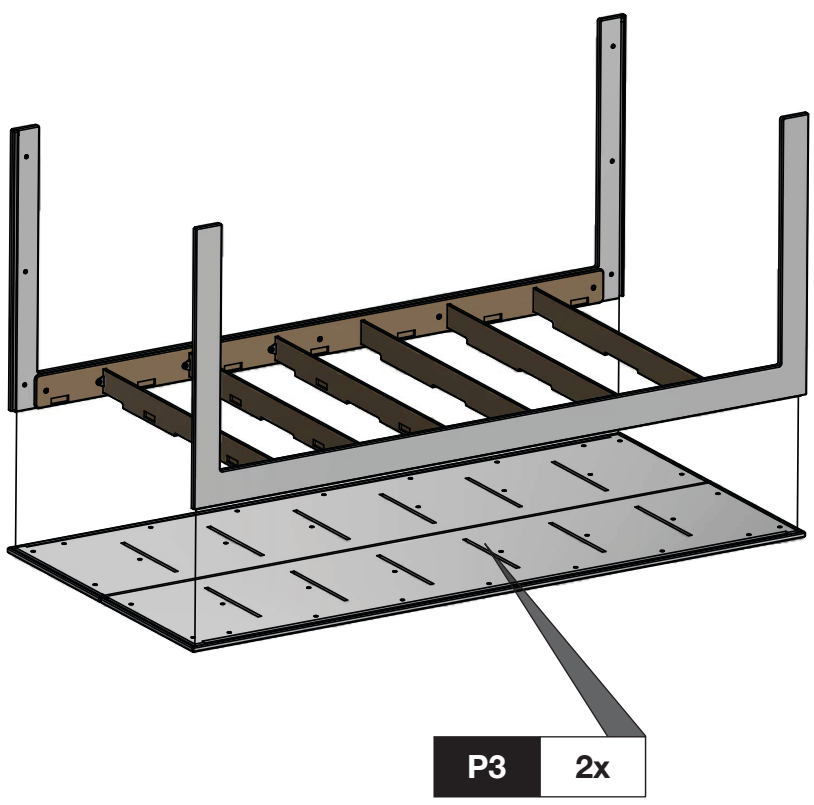

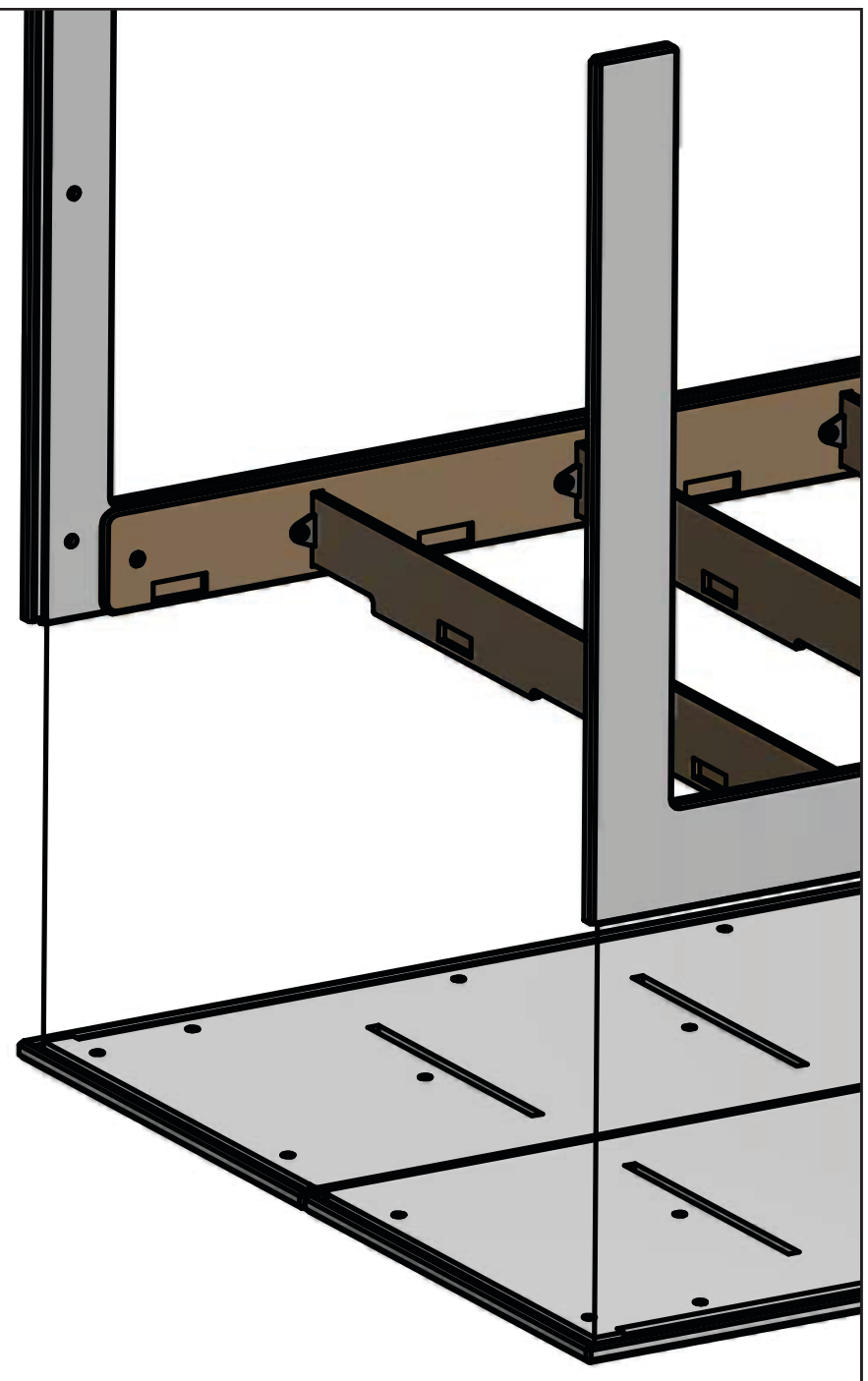

3

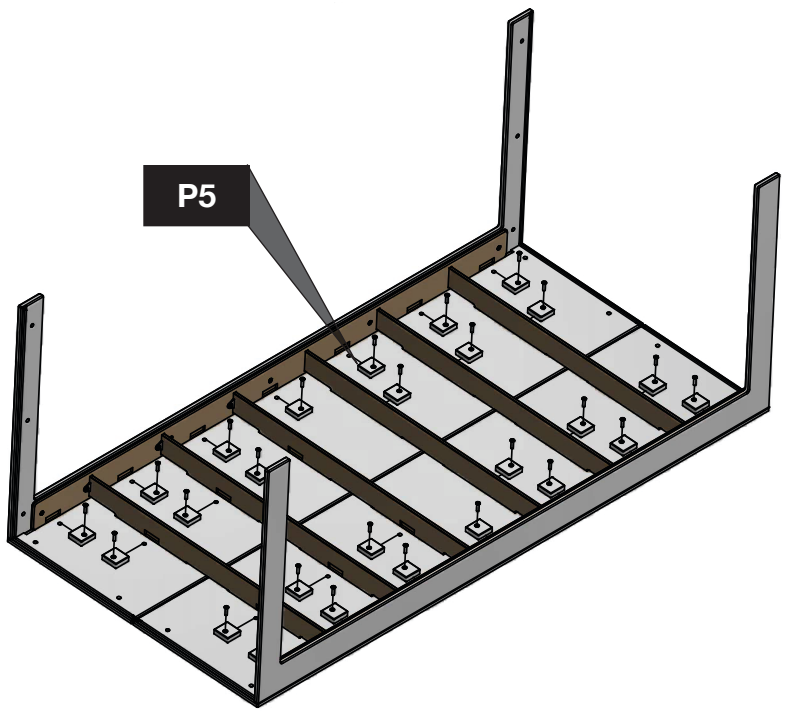

60 x 36	72 x 36 and 80 x 40
P5 18x	P5 26x
1″ 18x	1″ 26x

*80x40 table shown

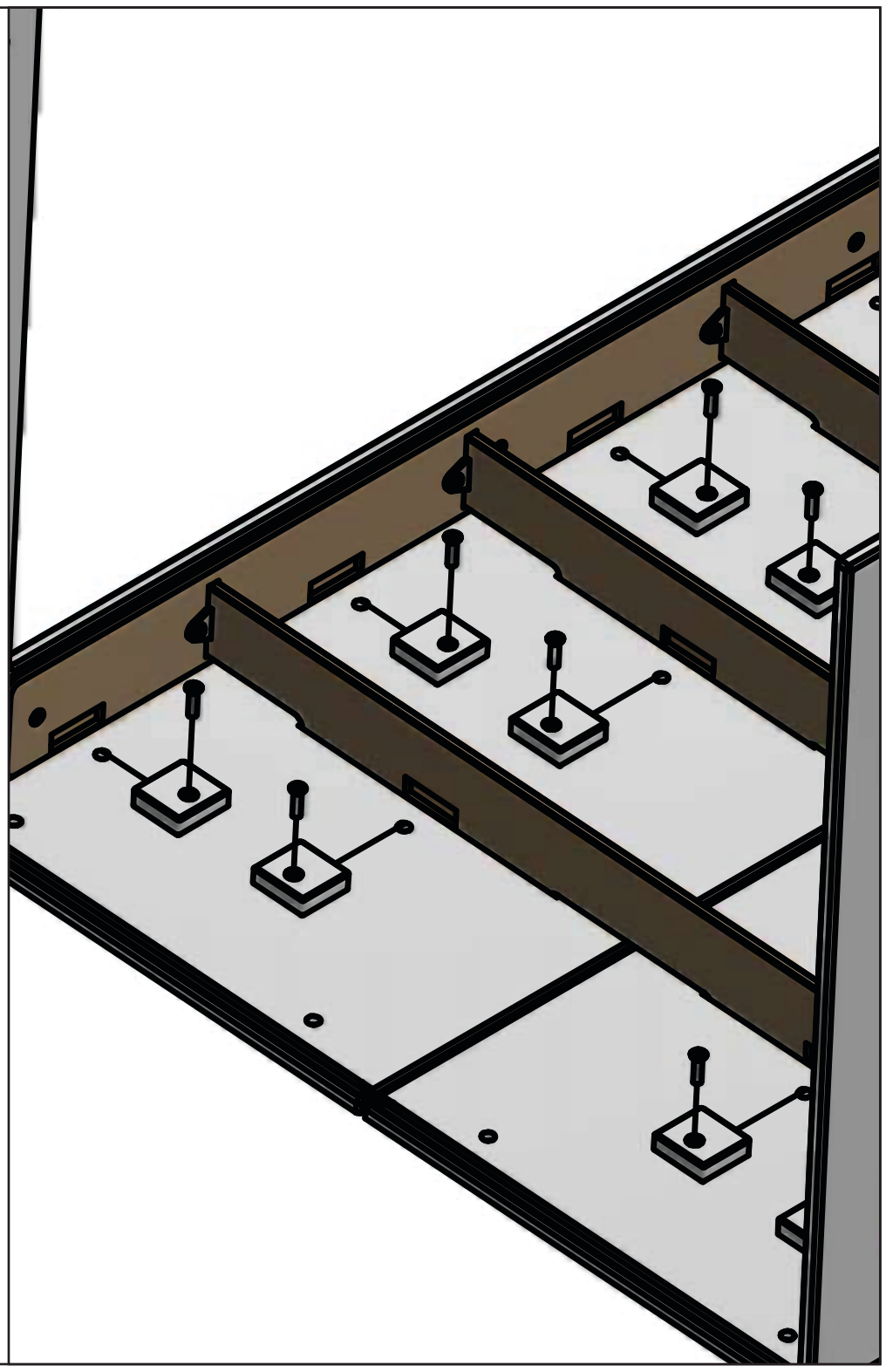

4

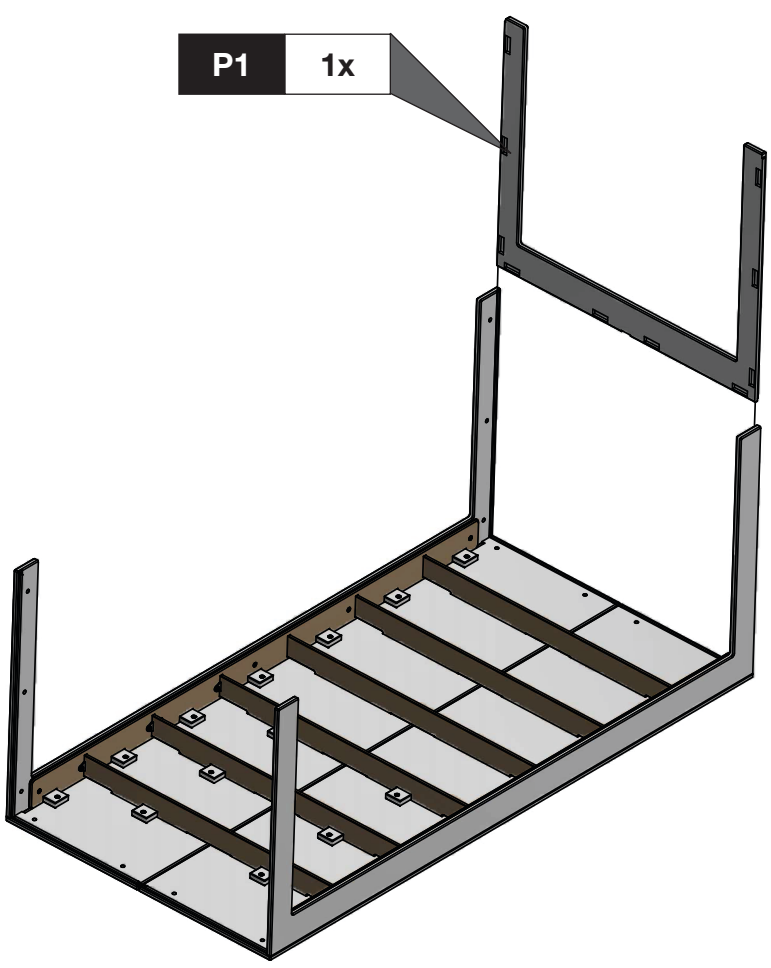

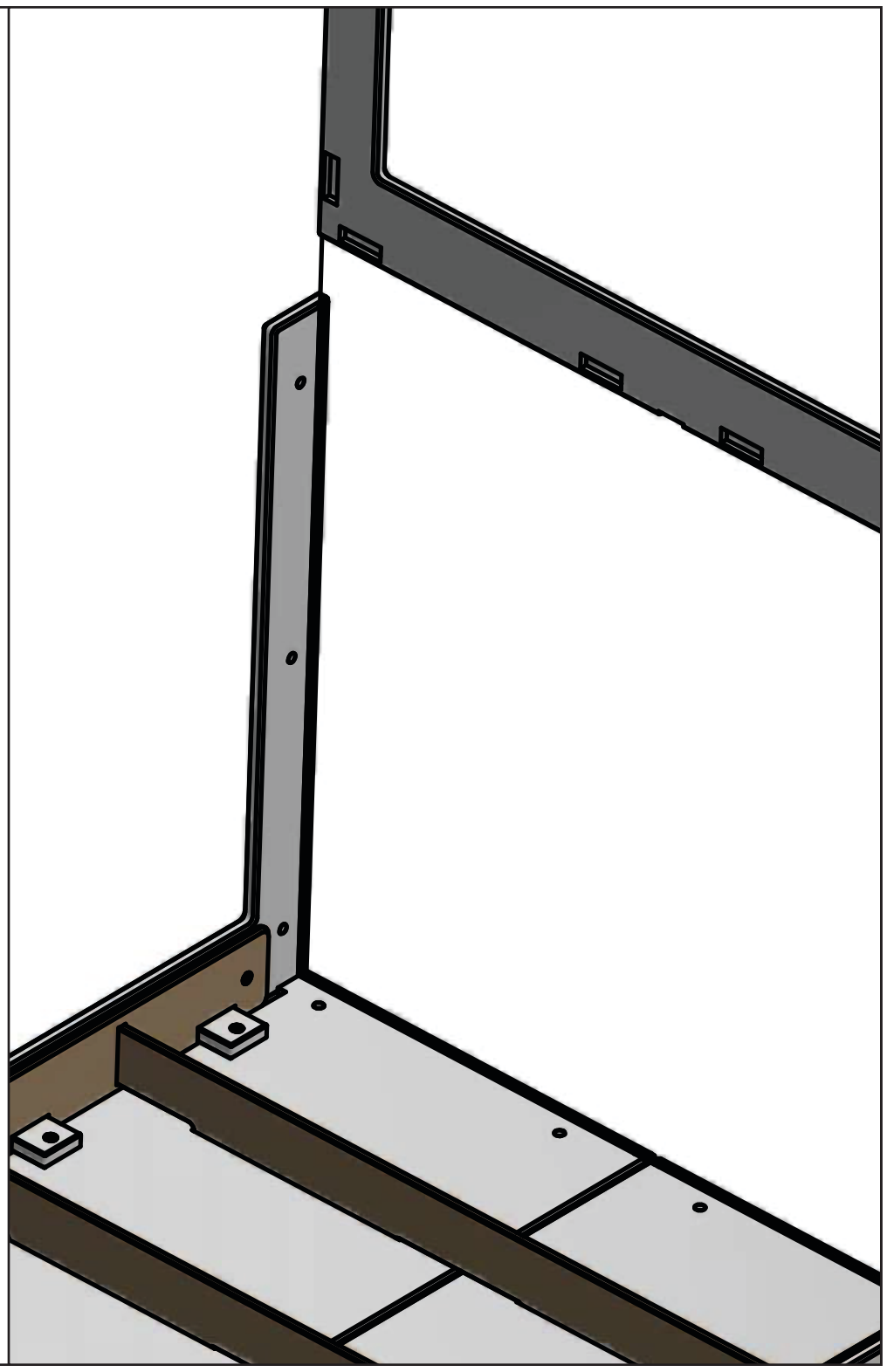

5

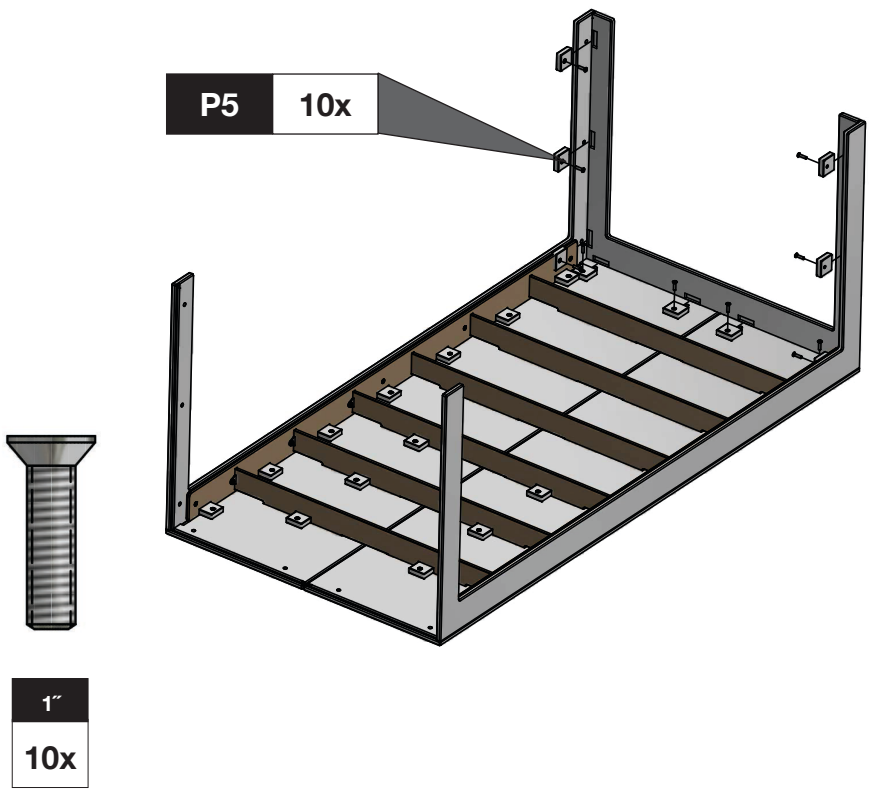

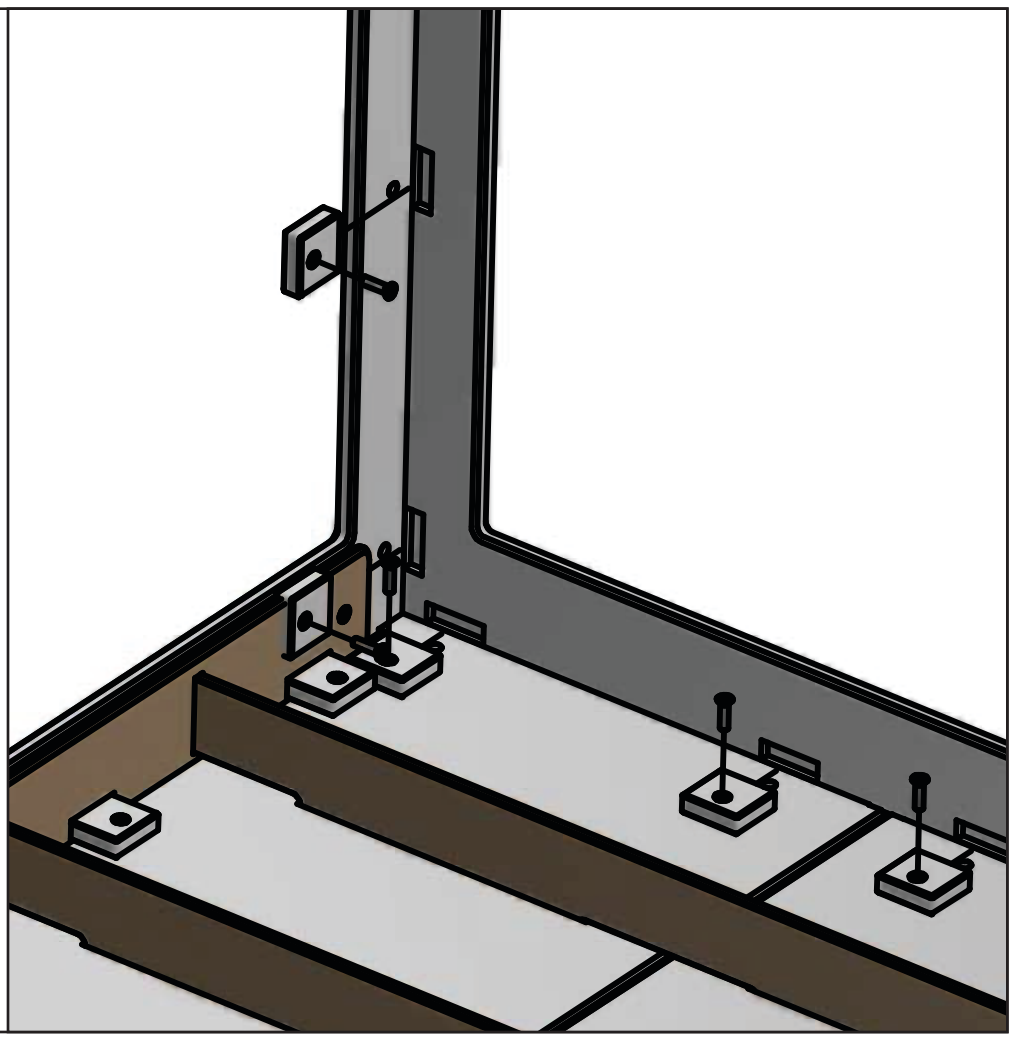

6

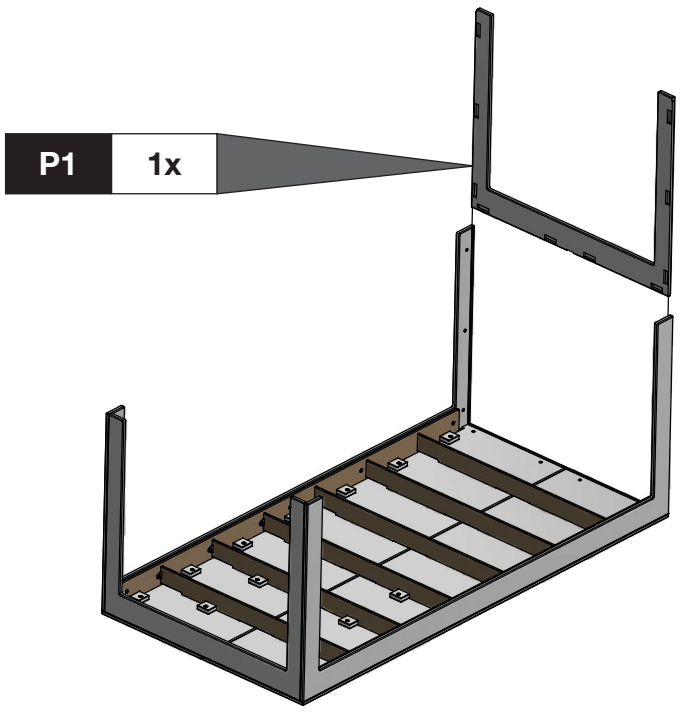

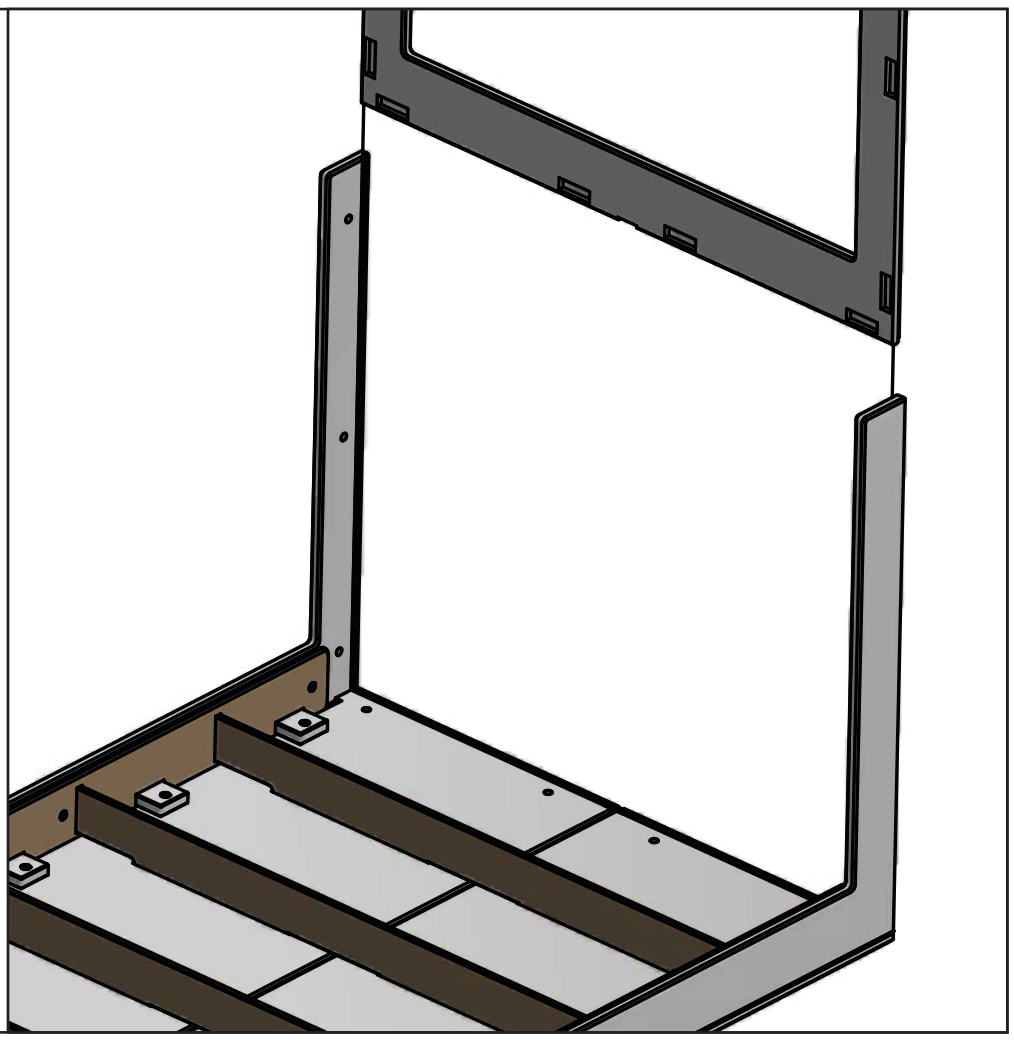
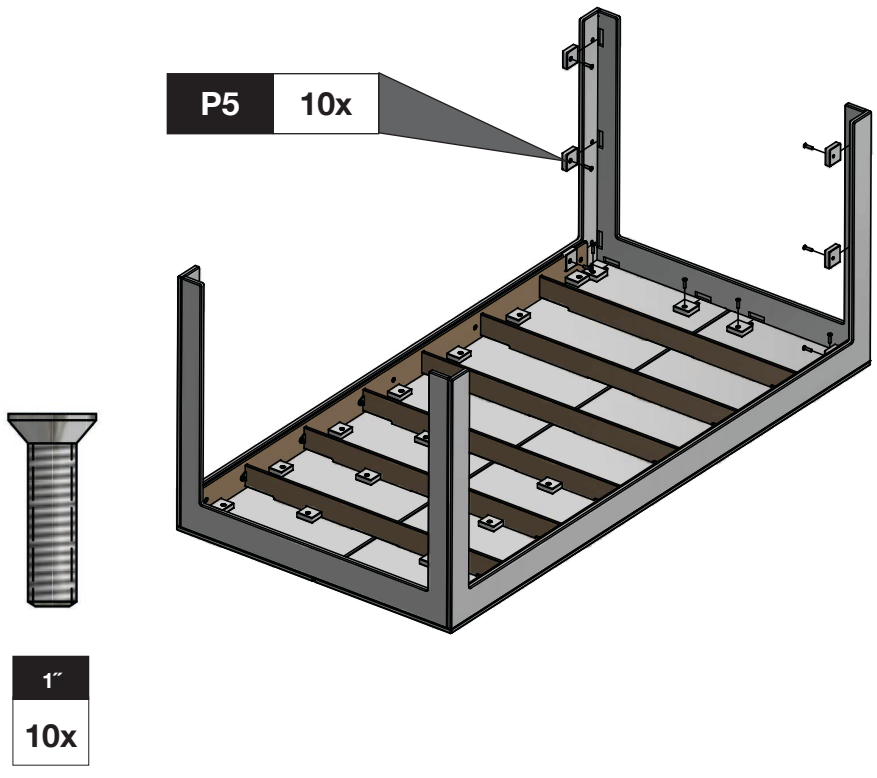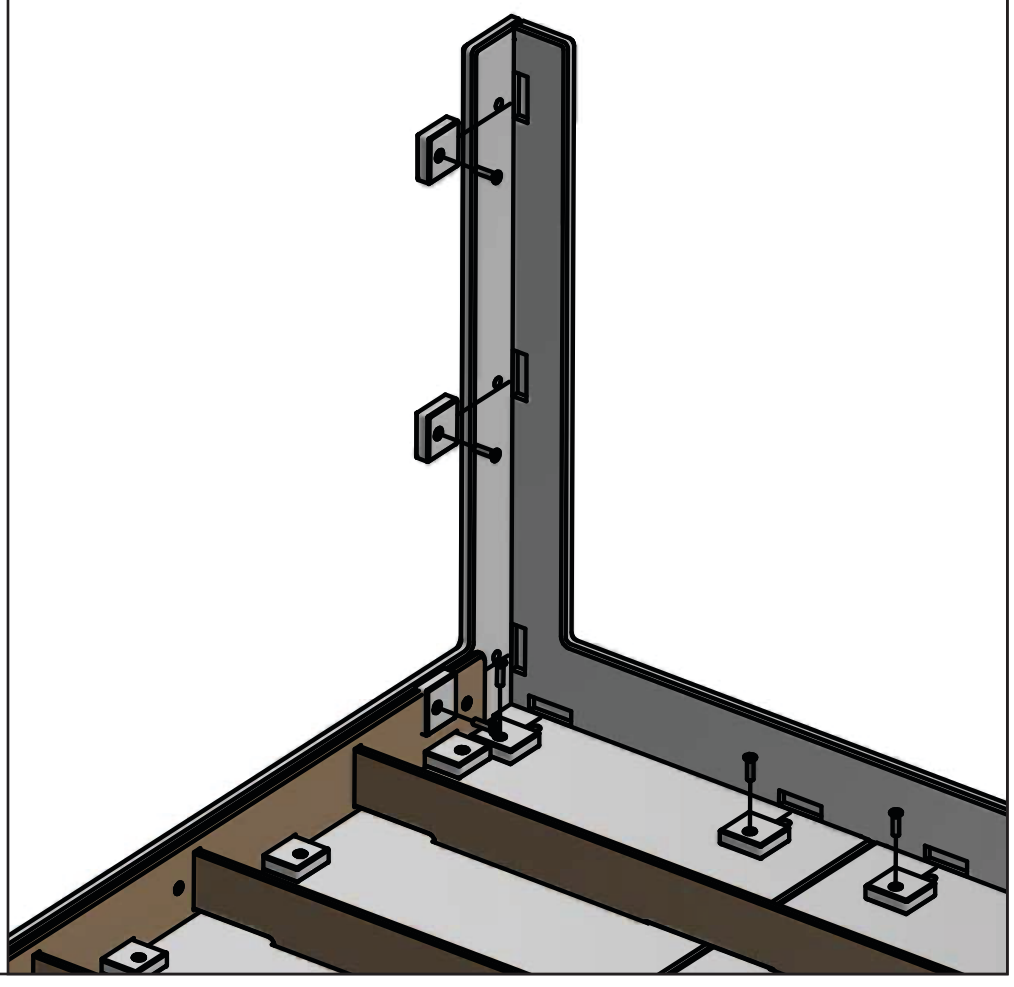
7